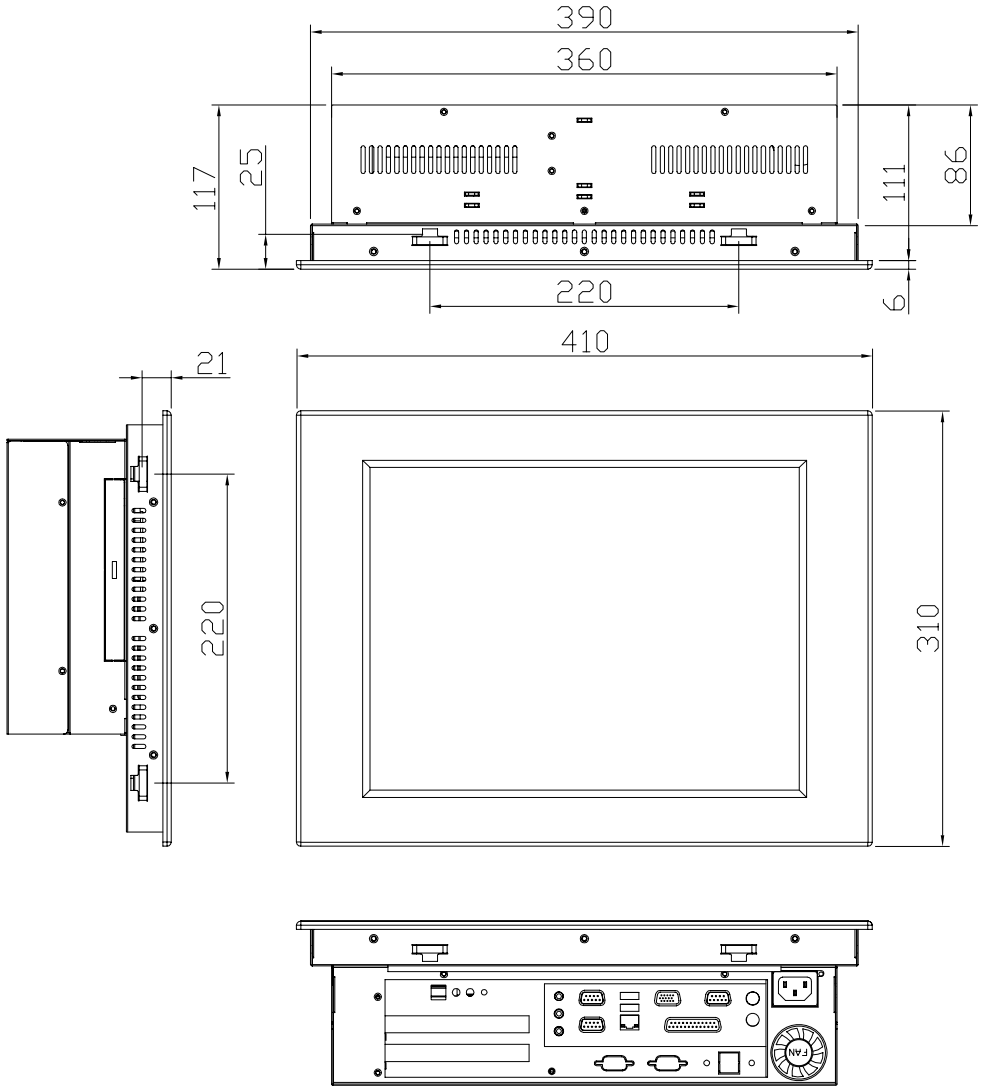

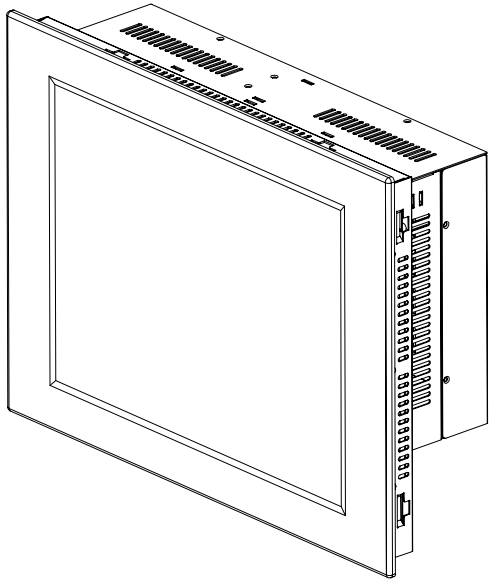

Mounting Hole Size