ACS-2665

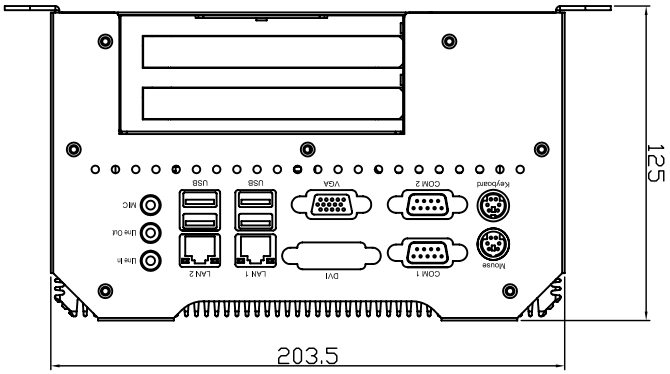
Mouse
Keyboard
COM 1
COM 2
DVI
VGA
LAN 1
LAN 2
USB
USB
Line In
Line Out
MIC
125
203.5

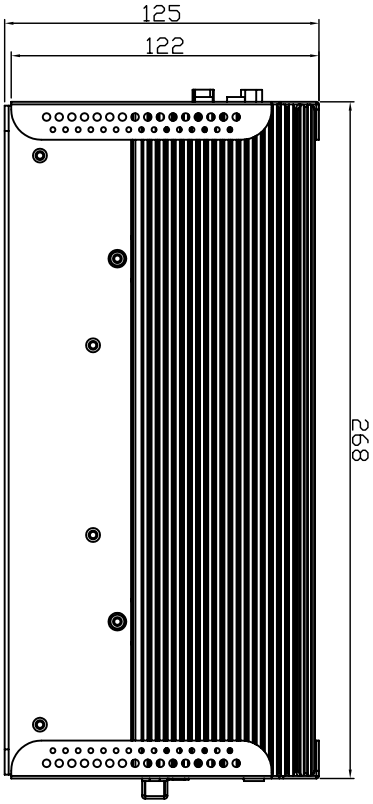
125
122
268

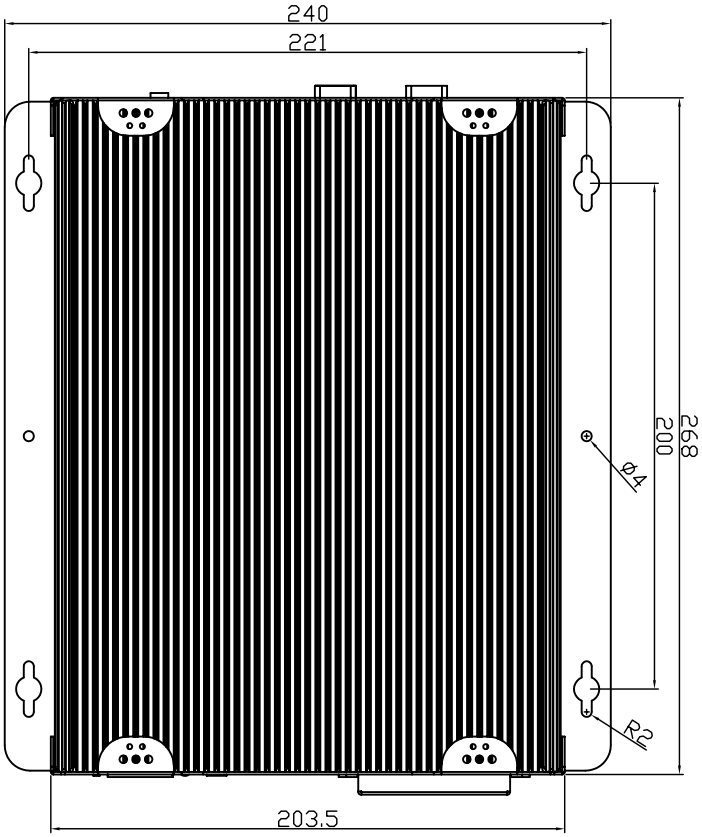
240
221
268
200
Ø4
R2
203.5

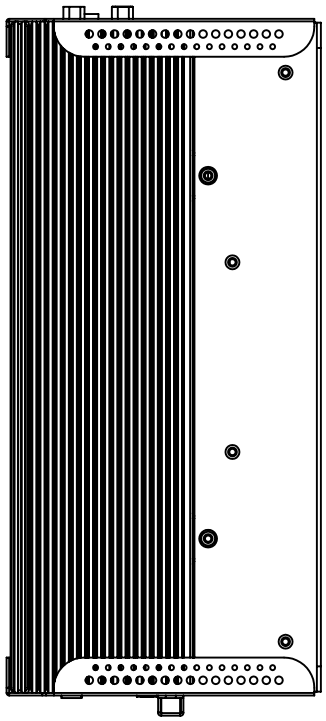

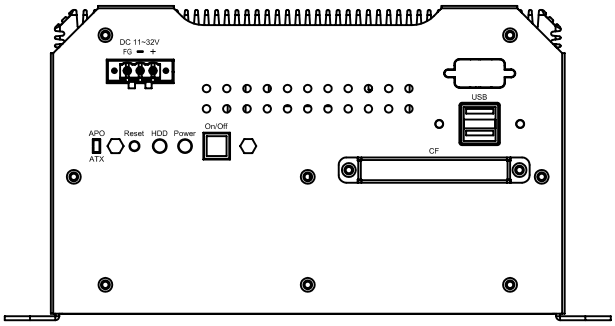
DC 11~32V
FG
APO
ATX
Reset
HDD
Power
On/Off
USB
CF